BENQ GW2790QT
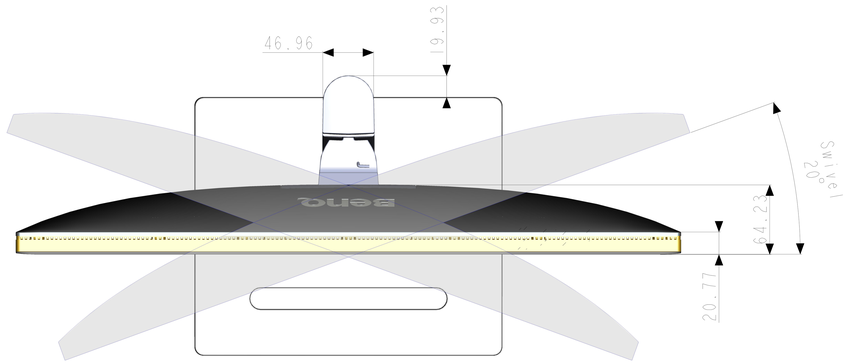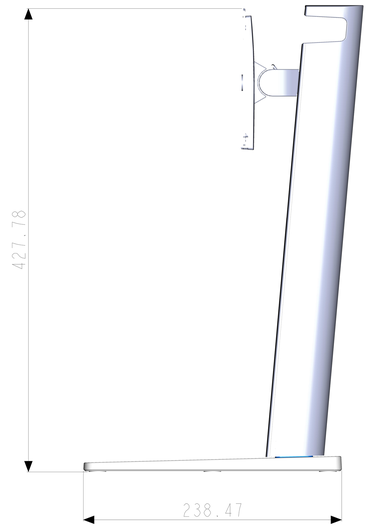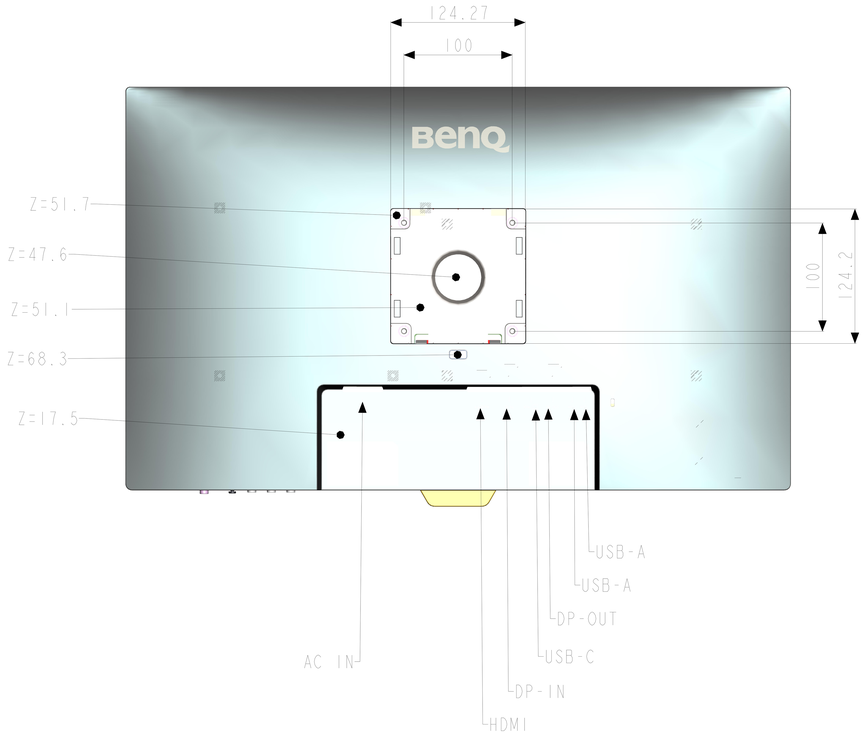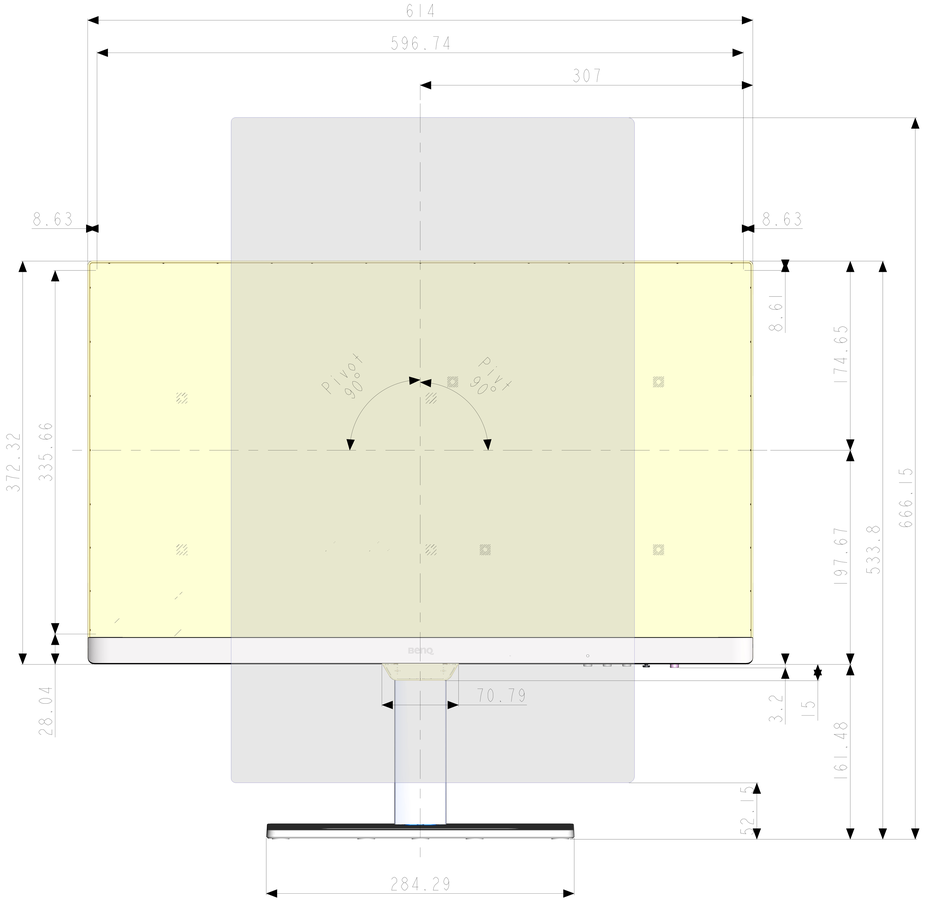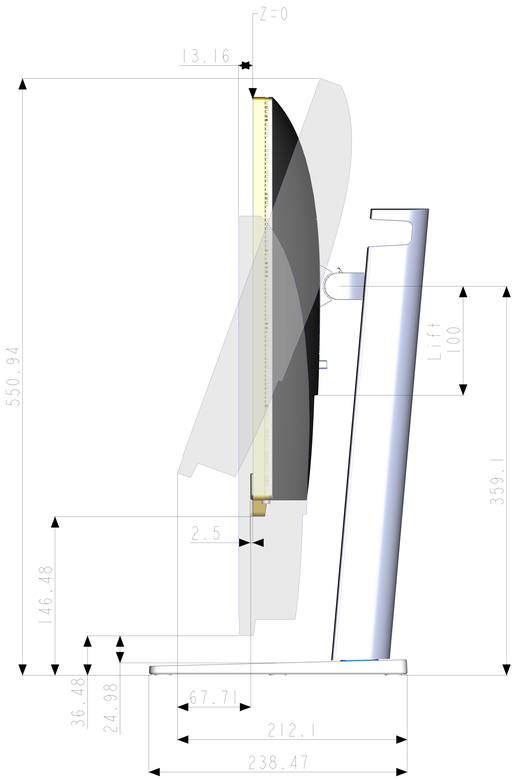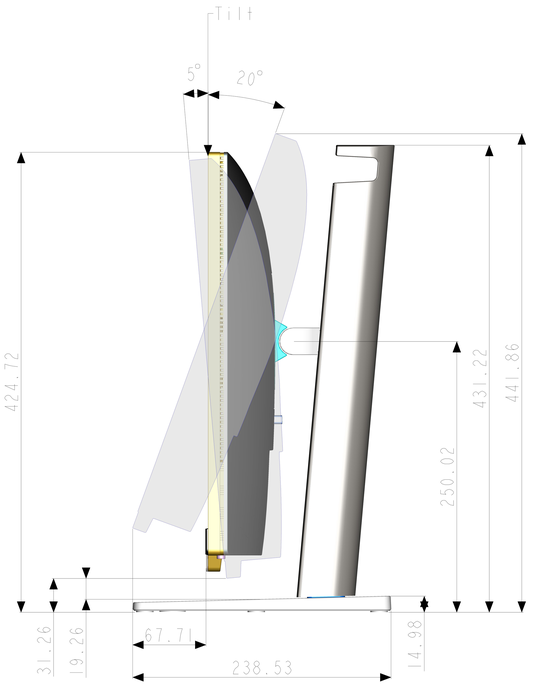
Unit : mm
Dimension : Norminal
Drawing : Not to Scale